Small Standard Distribution Box Specifications

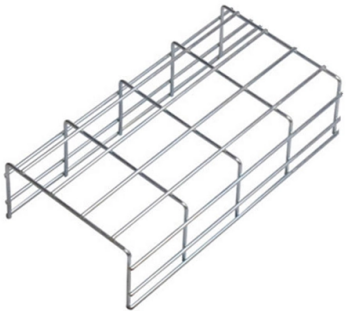

Overview

This document provides specifications for various distribution boxes including dimensions, mounting sizes, and number of ways. A distribution box is a low-voltage electrical enclosure that receives incoming power and distributes it safely to multiple outgoing circuits through protective and switching devices such as MCBs, RCDs, RCBOs, fuses, isolators, busbars, neutral bars, earth bars, and surge protective devices. Dimensions included are length, width. 1. Our mission is to meet customer"d5s expectations by providing satisfaction through cost, quality, service, delivery and continuous improvement. Actual units use PNP status indicator, NPN status indicator, or neither. Wiring diagram shows PNP wiring. From powering homes and industrial facilities to supporting medium-voltage infrastructure, these enclosures ensure safe, efficient, and reliable power distribution. Whether it's a small electrical.

Article Content

Distribution Box and Selection Guide: Internal Structure, Components ...

Learn how to choose a distribution box and understand its internal structure, including MCBs, busbars, neutral bars, earth bars, RCDs, RCBOs, SPDs, enclosure ratings, and wiring layout.

Distribution box catalogue | PDF

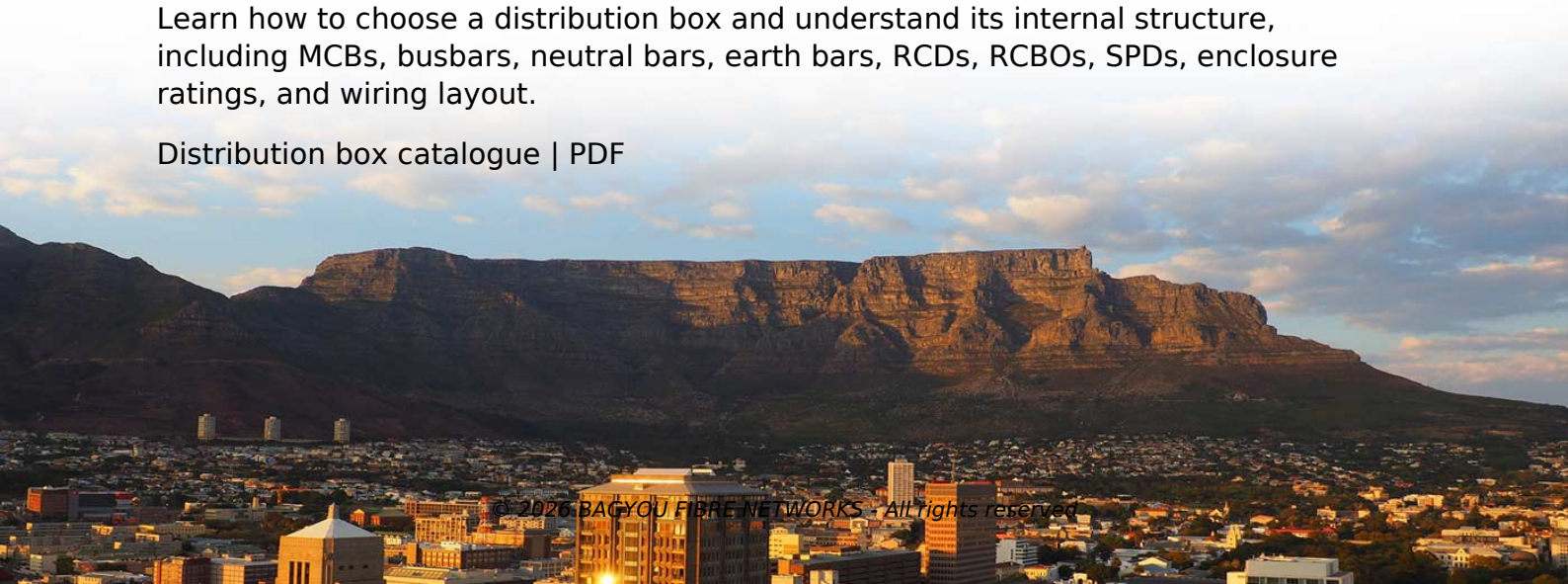

© 2026 BAGYOU FIBRE NETWORKS - All rights reserved

It includes specifications for TOP-TS, TOP-TF, TOP-LS, TOP-PS, TOP-PF, and TOP-S distribution boxes that range from 1-way to 36-ways. Dimensions included are length, width, and height. -

Final_product_book_12_curve

GSDB-4030 400x300x190 3 Phase Service Connection Distribution Box/ ABC Distribution Box 11.

Distribution Boards & Consumer Units

Mini Center Compact is a reliable range of distribution boards allowing maximum flexibility, offering wide choice of incomers: Switch Disconnector, MCCB, MCB, RCCB, RCD or Direct Cable Connection.

Distribution Boxes Technical Data

Two provided with box. One set provided with box. Dimensions are shown in mm (in.). (1) Replace x with 1 [1 m (3.28 ft)], 2 [2 m (6.56 ft)], 3 [3 m (9.84 ft)], 5 [5 m (16.40 ft)], or 10 [10 m (32.81 ft)] for standard

Electrical Control Panels & Distribution Boxes: Sizes, Types, and ...

This guide explores control panels, electrical boxes, breaker panels, bus bars, junction boxes, and custom enclosures to help you understand their sizes, types, and common applications.

Distribution Box Guide: Types, Components & Solutions

Understand distribution boxes (DB boxes) in 5 minutes. Learn about types, components, functions, and uses. Find the perfect DB box for your needs.

Distribution Box Specifications And Models

MNS series: Suitable for various power supply and distribution needs, compact structure, stable performance, widely used in low-voltage distribution

CATALOGUE General purpose enclosures Heavy duty and industrial

Polycarbonate boxes are available with a smooth surface (one single entry) or with multiple metric cutouts. xes are available with a smooth surface or with multiple metric Opaque gray or transparent

Distribution Box Specifications & IEC Protection Standards

Evaluate distribution box parameters, bus bar configurations, and overcurrent protection requirements for industrial compliance.

Distribution Boards & Consumer Units

© 2026 BAGYOU FIBRE NETWORKS - All rights reserved

Distribution boards, together with modular ABB system pro M Compact protection devices and Modular Din Rail Components, can be used for many applications in electrical building installation. Solutions

Electrical Control Panels & Distribution Boxes: Sizes,

Learn about control panels, breaker boxes, junction boxes, and custom enclosures. Explore standard panel sizes, applications, and key

Distribution box | PDF

This document provides specifications for various types of plastic distribution boxes, including their dimensions and features. It describes HA, HK, and LGD series

Design requirements and standards for low voltage distribution boxes

Key Takeaways Always prioritize safety by following NEC and IEC standards for low voltage distribution boxes. Check voltage and current ratings to ensure the distribution box can

Requirements And Specifications For Installation Of Distribution Boxes ...

In flammable and explosive environments, explosion-proof distribution boxes should be selected and explosion-proof treatment should be carried out. The installation of explosion-proof

How to Choose Shipping Box Size, Shape and Strength

Withe various shapes and size to chose from, this guide can help you choose the right shipping box to fit your business needs.

What Is The Size Of A Standard Electrical Box | Storables

Learn about the standard size of electrical boxes in this insightful article. Discover everything you need to know about electrical box dimensions

Outdoor Electrical Distribution Box Specifications: NEC

Complete specification guide for outdoor electrical distribution boxes covering NEC Article 312 requirements, NEMA ratings, sizing calculations, and

© 2026 BAGYOU FIBRE NETWORKS - All rights reserved

Contact Us

Continue your research online:

Website: https://bagyou.es
Technical inquiry: https://bagyou.es/project-enquiry.html

This document is for preliminary research. Verify specifications against current standards, product documentation and project requirements.

© 2026 BAGYOU FIBRE NETWORKS - All rights reserved