Monaco s butterfly-shaped optical cable manufacturing process

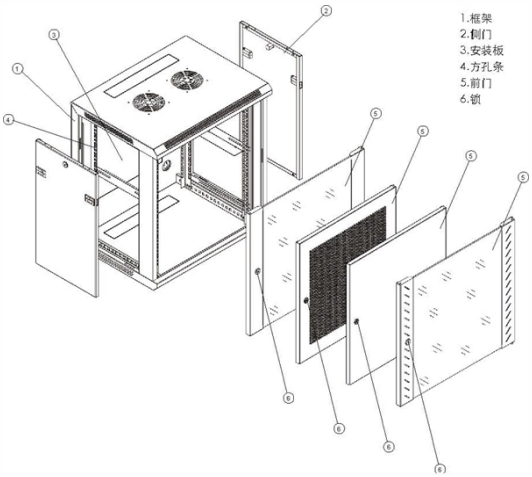

Overview

CN117452578A In a second aspect, the present application provides a process for producing a butterfly-shaped optical cable, for producing a butterfly-shape.

Key Takeaways

Monaco's butterfly-shaped optical cable is produced using an air-blown, reinforced flat design that combines lightweight construction with high flexibility and durability.

Cable Structure

The butterfly-shaped optical cable features a flat, strip-like design that resembles a butterfly, making it ideal for indoor and pipeline installations in confined spaces. The cable body includes: Sheath: Encasing the internal components, often made of low-smoke, halogen-free flame-retardant polyolefin or PVC. Reinforcing members: Parallel layers of steel wire or fiber-reinforced polymer (FRP) provide tensile strength.

Optical fibers: Single-core or multi-core fibers are embedded within the cable body. Grooves and bulges: The sheath has longitudinal grooves and dentate bulges to reduce friction and facilitate air-blown installation. This design allows low cable weight, reduced friction, and improved bending performance, which lowers installation costs and extends service life.

Manufacturing Process1.

© 2026 BAGYOU FIBRE NETWORKS · All rights reserved

Optical Fiber Production

The optical fibers are first manufactured using high-purity silica glass. Key steps include: Glass deposition: Volatile precursors like silicon tetrachloride ($SiCl_4$) and germanium tetrachloride ($GeCl_4$) react with oxygen in a flame or chemical vapor deposition process to form doped silica layers. Preform fabrication: The deposited glass layers are consolidated into a solid rod called a preform, which replicates the fiber's core and cladding structure.

Fiber drawing: The preform is heated and drawn into thin optical fibers, maintaining precise refractive index profiles for optimal light transmission. 2.

Cable Assembly

Once fibers are produced, the butterfly-shaped cable is assembled: Placement of fibers and reinforcement: Optical fibers and reinforcing members are positioned inside the flat cable body. Sheath extrusion: The outer sheath is applied over the fibers and reinforcement, forming grooves and bulges along the length. Bundling and wrapping: For multi-core or cluster cables, individual butterfly units are wrapped around a central non-metallic reinforcing piece, with industrial non-woven fabrics and polyester tape applied for protection.

3.

Air-

Blown Installation Preparation

The air-blown design allows the cable to be installed using compressed air through ducts or pipelines. The grooves and bulges reduce friction, enabling long-distance deployment without excessive pulling force.

Advantages

Lightweight and flexible: Easier handling and installation in tight spaces. High tensile and compression resistance: Reinforcement layers protect fibers during vertical or horizontal wiring. Reduced installation cost: Air-blown design minimizes labor and mechanical stress.

Durable and flame-retardant: Suitable for indoor FTTH (fiber-to-the-home) applications. Monaco's butterfly-shaped optical cable combines advanced fiber fabrication with innovative flat cable design, making it highly suitable for modern high-density indoor and pipeline fiber deployments.

© 2026 BAGYOU FIBRE NETWORKS - All rights reserved

Article Content

CN117452578A

In a second aspect, the present application provides a process for producing a butterfly-shaped optical cable, for producing a butterfly-shaped optical cable as described above,...

Optical Fibre Manufacturing Process

The production process executes a dimensional reduction by five orders of magnitude, while preserving materials purity and optical characteristics. Each step plays a unique role – vapor

Optical Cable Manufacturing: A Deep Dive into the Process

Explore the optical cable manufacturing process. Learn about raw materials, fiber drawing, cabling, and quality control in modern optical cable manufacturing.

Steps in Fiber Optic Cable Manufacturing Process

Explore the intricate steps and materials in fiber optic cable manufacturing process. Learn about cable testing methods and quality control.

Fiber Optic Cable Manufacturing Process: How They Are Made

In this blog, we''ll take a closer look at the step-by-step fiber optic cable manufacturing process, the materials used, and why these cables are so essential for our digital world.

The Complete Guide to Fiber Optic Cable Manufacturing: Powering

At Sinoptec, our advanced manufacturing processes ensure each fiber meets rigorous industry standards for telecommunications and enterprise networks. Multi-mode fiber, with its larger

Fiber Optic Cable Manufacturing Process: A Detailed Overview

The manufacturing process begins with the creation of a glass preform, which is the precursor to the optical fiber. This preform is typically made from silica and is formed through

How Are Optical Fibers Made, Step by Step?

Optical fibers start as a glass rod and get stretched into strands thinner than hair. Here''s how the whole process works, from raw materials to finished cable.

CN117452578A

© 2026 BAGYOU FIBRE NETWORKS - All rights reserved

The butterfly-shaped optical cable is additionally provided with the foaming filling unit, so that the compression resistance, impact resistance, heat preservation, heat insulation and water resistance

CN115933087B

The application relates to a butterfly-shaped optical cable machine manufacturing process, which relates to the technical field of optical cables and comprises cable cores and reinforcing pieces positioned on

Butterfly -shaped optical fiber optical cable

Butterfly-shaped optical fiber cables are a popular type of fiber optic cable that is commonly used for data transmission in telecommunication networks. They are called butterfly-shaped due to

Indoor and outdoor four-core butterfly-shaped optical cable and ...

The invention discloses an indoor and outdoor four-core butterfly-shaped optical cable and a technological process thereof, and relates to the field of communication hardware manufacturing.

Optical Fiber Manufacturing: From Preform to Final Fiber Process

In this guide, we break down the two core stages of optical fiber manufacturing: preform production (shaping the precursor material) and fiber drawing (transforming the preform into thin,

Optical Cable Production Line: Revolutionizing Global Connectivity ...

Conclusion The optical cable production line has transcended its role as manufacturing infrastructure to become a strategic differentiator in the global technology race.

The Fiber Cable Manufacturing Process

Fiber optic cables are the backbone of modern telecommunications, providing high-speed data transmission over long distances with minimal loss. Understanding the manufacturing process

Optical Fibre Manufacturing Process

Optical Fibre and Cable Testing Performance verification forms an integral part of the manufacturing of optical fibre. The capability of each length of optical fibre to meet the required optical, geometrical,

CN115826167A

© 2026 BAGYOU FIBRE NETWORKS - All rights reserved

In the butterfly cable, a polytetrafluoroethylene layer and a modified polypropylene layer are added to effectively avoid signal attenuation caused by excessive bending of the optical fiber, and a certain

Fiber Optic Cable Manufacturing Process: How They Are Made

The manufacturing process of fiber optic cables is a fascinating journey involving cutting-edge technology, precision engineering, and strict quality control. In this blog, we''ll take a closer look

Contact Us

Continue your research online:

Website: https://bagyou.es
Technical inquiry: https://bagyou.es/project-enquiry.html

This document is for preliminary research. Verify specifications against current standards, product documentation and project requirements.

© 2026 BAGYOU FIBRE NETWORKS - All rights reserved