Modeling of Tubular Busbars

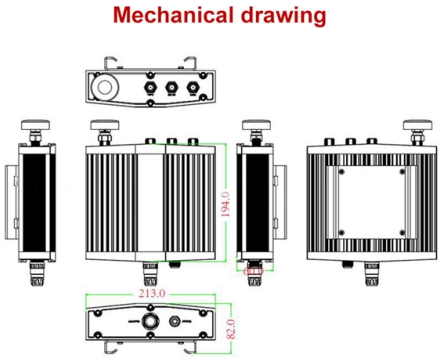

Overview

To reduce the need for manual intervention, an intelligent tape-winding robot for insulated tubular busbar insulation layers was developed.

Key Takeaways

Tubular busbars can be effectively modeled using multiphysics simulations to analyze electrical, thermal, and mechanical performance under operational and short-circuit conditions.

Overview of Tubular Busbar Modeling

Tubular busbars are metallic conductors, often copper or aluminum, used to carry high currents in power distribution systems. Their tubular geometry provides mechanical rigidity and efficient heat dissipation. Modeling these busbars involves evaluating current density, voltage distribution, temperature rise, electromagnetic forces, and structural displacement to ensure safe and reliable operation.

Key Simulation Considerations

Electrical Analysis

Compute current density and voltage distribution along the busbar.

Include A

C effects such as skin and proximity effects for high-frequency or high-current applications. Evaluate inductance and capacitance between busbar legs or nearby conductive materials.

© 2026 BAGYOU FIBRE NETWORKS · All rights reserved

Thermal Analysis

Simulate Joule heating and temperature rise under nominal and short-circuit currents. Identify hotspots, especially near bolted joints or bends. Consider convective cooling and material thermal conductivity for accurate temperature predictions.

Mechanical Analysis

Assess Lorentz forces generated during short-circuit events. Evaluate structural displacement and stress to prevent deformation or failure. Coupled electro-thermo-mechanical simulations provide a comprehensive view of busbar performance under extreme conditions.

Software Tools for ModelingCOMSOL Multiphysics: Offers AC/DC and thermal modules to model tubular busbars, including capacitive, inductive, and thermal effects in 2D and 3D geometries.

EM

Works: Provides electrothermal and electromagnetic simulations for high-current busbars, including short-circuit analysis and force density evaluation.

INTEGRATE

D Engineering Software: Supports CAD import, electric and magnetic field analysis, eddy current coupling, and thermal simulations for busbar design. FTZ-Panel 3D: Focuses on busbar layout and manufacturing documentation, integrating cabinet design and wire routing for practical engineering applications.

Best Practices

Use multiphysics simulations to capture interactions between electrical, thermal, and mechanical effects. Validate models with experimental measurements or manufacturer data for material properties and thermal coefficients. Optimize geometry and spacing to minimize losses, reduce hotspots, and ensure mechanical stability.

Consider insulation, mounting, and cooling strategies to enhance safety and reliability in high-current applications. By combining these approaches, engineers can design tubular busbars that are efficient, safe, and capable of handling high currents in industrial, renewable energy, and electric vehicle applications.

© 2026 BAGYOU FIBRE NETWORKS - All rights reserved

Article Content

Electrical-mechanical model of Electrical Breakdown of Epoxy ...

In this paper, the full-scale model of epoxy-impregnated-paper insulated tubular busbar with bubble defects was designed and produced, its electrical breakdown process was investigated by withstand

Adaptive trajectory method and posture planning for mobile robotic

To reduce the need for manual intervention, an intelligent tape-winding robot for insulated tubular busbar insulation layers was developed. It is composed of a tape-winding tool, a robotic arm and an

A finite element analysis of Substation Aluminum Busbars

Most of the busbars are 3D in nature, therefore a 3D model was used to perform analysis of all busbars. The deformation, stress and temperature profiles of various busbars also vary in all 3 axes.

Busbars | INTEGRATED Engineering Software

INTEGRATED''s suite of CAE software products provides a complete toolbox to simulate Busbars and other power system components. The main features of our

High-Power Busbar Design | Magnetic Field, AC Loss

High Power Busbar This application involves analyzing high-power busbars using EMWorks2D. Transient electromagnetic simulations compute various

Comparison of Insulated Tubular Busbars with Different

In this paper, epoxy/paper composites insulated tubular bus was investigated and a two-dimensional model was preferred in the simulation due to the axial symmetry of insulated tubular bus.

Comparison of Insulated Tubular Busbars with Different Insulated ...

In recent years, the low-voltage insulated tubular busbars have been widely implemented due to the merit of high current-carrying capacity. Due to the uneven productive quality, failures of insulated

Types of busbars (solid, stranded, and tubular) in context of busbar ...

In conclusion, solid, stranded, and tubular busbars are three common configurations used in electrical distribution systems. Each configuration has its own strengths and weaknesses,

A finite element analysis of Substation Aluminum Busbars

© 2026 BAGYOU FIBRE NETWORKS - All rights reserved

While some busbars and boundary conditions can be modeled in 2D to reduce computing cost, this was not required for analysis'' sake; therefore, a 3D model was used. To capture the behavior of smaller

Operational experience with dynamic current rating of busbar

2 Verification of the ampacity of tubular busbars and conventional ACSR conductor busbars To verify the model for determining the weather-dependent current rating, the calculated and

A Thermal-Mechanical Approach for the Design of Busbars Details

The mechanical behavior of busbars is a complex, displacement controlled problem intimately linked to the conductors'' temperature. Thermal stresses are generated between two bodies submitted to

(PDF) Calculations of Electrodynamic Forces in Three ...

Moreover, showing that a model based on finite elements tends to be very helpful in the selection of unusually-shaped busbars in various electrotechnical applications, like switchgear.

Three-Phase Busbar Thermal and Mechanical Analysis

Three Phase Busbars High-performance electrical installations rely on flexible and efficient power distribution. Busbar systems serve as essential connection points,

(PDF) Bus Bar Sizing Calculation For Substation.

The approach to these tasks involved considerable research, the use of mathematical tools for the implementation and verification of any developed mathematical models, and in some cases the use

Modeling of Busbars in High Power Neutral Point Clamped Three-Level ...

The busbars in high power neutral point clamped three-level inverters are modeled using the Maxwell Q3D Extractor software, which is based on the partial element equivalent circuits

(PDF) Steady-state and transient ampacity of bus bar

In some cases busbars appear to be the new limiting element.As weather-dependent operation of tubular busbars is not yet in practice, a physical model working in a similar way as

Aluminum Tubular Busbars for HV Use

The document discusses the advantages of using aluminum tubular busbars rather than stranded conductors for high voltage outdoor substations. It provides information on selecting the appropriate

© 2026 BAGYOU FIBRE NETWORKS - All rights reserved

ALUMINIUM TUBULAR BUSBARS FOR HV SUBSTATIONS

Aluminium tubular busbars offer lighter weight and higher stiffness compared to stranded conductors, enhancing support efficiency. Busbars can achieve lengths of approximately 140 meters when

Related Video Reference

This video was associated with the source search result. Verify technical details against current product documentation and project requirements.

Contact Us

Continue your research online:

Website: https://bagyou.es
Technical inquiry: https://bagyou.es/project-enquiry.html

This document is for preliminary research. Verify specifications against current standards, product documentation and project requirements.

© 2026 BAGYOU FIBRE NETWORKS - All rights reserved